THE 8

GRAN COUPÉ

BAYERISCHE MOTOREN WERKE

168

1

THE NEW BMW 8 SERIES GRAN COUPÉ

2

DESIGN AND HIGHLIGHTS

28 The Vision
30 Exterior design
32 Interior design
38 Spaces with wow effect
40 High carat from high tech
44 Innovation
46 Dynamics

3

INNOVATION AND TECHNOLOGY

The Vision 52
Connectivity and infotainment 54
Driver assistance 56
Comfort and functionality 58

4

EQUIPMENT

60 The Vision
62 BMW Individual
64 Exterior design
66 Interior design
70 Technical data

DISCOVER MORE DIGITALLY: THE NEW BMW BROCHURE APP.

More information, more sheer driving pleasure: The new BMW brochure app offers a digital and interactive BMW experience like never before. Download the BMW brochure app for your smartphone or tablet now and rediscover your BMW.

Let's talk about courage,
and why we need it more than ever.
Courage is independent and disruptive.
Courage questions, shatters and awakens.
We need bold, courageous voices.
All of us.
We need fresh thinkers with optimism.
We believe in the frontrunners.
The avantgarde, those who fight stagnation
and backwardness.
Courage only knows moving forward.
Driving the pioneers of our culture
to inspire tomorrow.
To create a sublime kind of new.
Reaching a superior level of excellence.
This is where a
new kind of luxury is born.
BMW
BAYERISCHE MOTOREN WERKE

WHEN POWER CREATES DYNAMICS AND AESTHETICS CREATES JOY, THERE IS PERFECTION, WHICH SURPASSES EVERYTHING.

A PERSONALITY BETWEEN AMBITION AND EMOTION, BETWEEN PRESENCE AND EXTRAVAGANCE – THE HEART RECOGNISES FROM THE VERY FIRST ENCOUNTER WHAT WORDS CAN ONLY DESCRIBE.

DISCIPLINE. COMPOSURE. RETICENCE. THERE'S A TIME FOR ALL OF THAT. BUT THERE ARE MOMENTS WHEN PERFECT, UNCONDITIONAL ENTHUSIASM IS THE ONLY CONCEIVABLE REACTION.

ONE SECOND. ONE LOOK. ONE SINGLE GESTURE.
WE RECOGNISE TRUE CHARISMA IN A FEW MOMENTS.
BUT WHEN WE ENCOUNTER IT, THE REST OF OUR PATH
CHANGES.

THINGS THAT ONLY SERVE THEIR PURPOSE MAY TAKE US FURTHER. BUT A NEW WAY OF THINKING IS NEEDED TO GET TO WHERE THE FEELING OF ABSOLUTE FREEDOM ARISES FROM HEIGHT, WIDTH AND LENGTH.

IS SIZE A PHYSICAL DIMENSION? ABSOLUTELY. BUT SOMETIMES, RARELY, A SINGLE ENCOUNTER MANAGES TO MAKE US FEEL WHAT THIS TERM CAN REALLY MEAN.

WHEN SOMETHING IS SHAPED IN SUCH A WAY THAT IT CAPTIVATES LOOKS AND AROUSES EMOTIONS, THE INNER VALUES RECEDE INTO THE BACKGROUND. UNLESS THEY OUTDO EVERYTHING ELSE.

AN UNMISTAKABLE CHARACTER.
AN AESTHETIC STATEMENT
THAT OVERRIDES ANY RESISTANCE
WITH CLASS. AFTER AN ENCOUNTER
WITH PERFECTION, COMPROMISES
NO LONGER HAVE A PLACE IN LIFE.

2

LUXURY MUST AROUSE EMOTIONS.

Searching and finding modern perfection: Adrian van Hooydonk, chief designer at the BMW Group, on the new appearance in the segment of the most exclusive vehicles.

The models under the name Bayerische Motoren Werke open up a new world within the BMW portfolio. What is your idea of contemporary luxury?

We do not want to tell our customers how they should define luxury for themselves, but just want to make an attractive, diverse offer. The perception of luxury is very different worldwide. But a central aspect that becomes visible everywhere is the increasing significance of personal time. It is becoming the most valuable asset in a globalised world.

How is the wish for perfection and refinement expressed in mobility?

In today's mobile world, we spend more and more time in various modes of transport. Cars are now like personal rooms on wheels. One wants to feel completely comfortable in them. A steering wheel that you touch, the materials that surround you have to feel perfect and the eye does not want to be disturbed by unclean lines or individual components. The interior of a vehicle is seen as a living space. It is about being surrounded by the highest possible sensuous quality.

What is the biggest challenge in the external appearance?

Luxury must be reflected to the outside world in a matter-of-fact way. There is a beautiful term for it: sophistication. For designers – our team has more than 700 employees at four locations worldwide, who are encouraged through constant competition with each other in terms of ideas – this means that every detail counts. The design has to arouse strong emotions while expressing the highest quality and durability at the same time. In order to be able to spend every moment intensely, full of meaning and beauty. Therefore, we are building a luxury ecosystem, a model family. In various forms of expression: contemporary saloons, elegant and very sporty coupés, but also vehicles that offer very luxurious space.

In the new designs, a common factor is noticeable: the reduction of lines. Do you want to increase luxury by making luxury less apparent in the design?

In this way, the design becomes clearer, more modern and more emotional. An expressive surface play is in the foreground, and the dynamics are emphasised even more than before by the vehicle body. The few but very precise vehicle lines underline the graphic design of the surfaces. The vehicle body looks more powerful, refined and luscious with the lavish surfaces without losing the sportiness that is typical to BMW. This is possible only because we work out every feature of a vehicle individually. For a BMW, one should be able to identify at first glance what kind of experience one would have with it. Especially in our large and particularly luxurious vehicles, we attach great importance to a marked appearance and the maximum possible feel-good factor in the interior. It's about freedom - and the feeling of being at home in a BMW.

A GREAT CHARACTER – SPORTIER THAN EVER.

A real sports car through and through – with unusually generous space: The unmistakable, unique design character of the new BMW 8 Series Gran Coupé makes this possible.

PROVOKES. ESPECIALLY EMOTIONAL OUTBURSTS.

A strong, independent character, recognisable at first glance – the new BMW 8 Series Gran Coupé interprets BMW's design language in its very own aesthetic way. The result is an appearance full of dynamism, elegance and presence: Even at the front, the muscularly modelled surfaces and precise contours of the bonnet make an impressive statement for unconditional power. The striking double kidney grille widens towards the bottom, emphasising the vehicle's low centre of gravity – an effect that is further emphasised by the flat, slightly raised headlights. In the side view, the roof line flowing to the rear emphasises the rousing coupé character of the vehicle. Iconic features such as the modern interpretation of the upright Hofmeister kink lend the elongated side window graphic a decisive measure of sublime presence. The interplay of generous surfaces and lines makes the flow of the airstream along the new BMW 8 Series Gran Coupé virtually visible. A suggestive third line runs through the door handles into the pronounced, curved shoulder and underlines the uniqueness of the new BMW 8 Series Gran Coupé.
This unmistakable character is particularly evident in the wide, self-confident rear with its muscular shoulder section: Inspired by automobile classics, the roof line of the new BMW 8 Series Gran Coupé in the form of two fins, which surround the rear window, leads into the upwardly curved rear – a design feature that is otherwise only found in handmade vehicles.

REAL SPORTS CAR.

Despite all the refinement in the design, the new BMW 8 Series Gran Coupé spreads one thing above all: a passionate, genuine sports car feeling that unmistakably expresses the forward thrust from every perspective. Starting with characteristic details such as the large air intakes in the front apron, every design element is shaped for maximum effect. Powerful proportions and a particularly long wheelbase allow a clearly dynamic sports car contour to be created despite its four doors. The wide wheel arches further enhance the effect of the rear – even when stationary, the new BMW 8 Series Gran Coupé always seems ready for a sprint. The high tear-off edge of the curved tailgate also makes it impressively clear how the maximum sportiness of the new BMW 8 Series Gran Coupé finds its expression in the design. This is what it looks like when exciting form merges with sophisticated function to create a uniquely dynamic masterpiece: the new BMW 8 Series Gran Coupé.

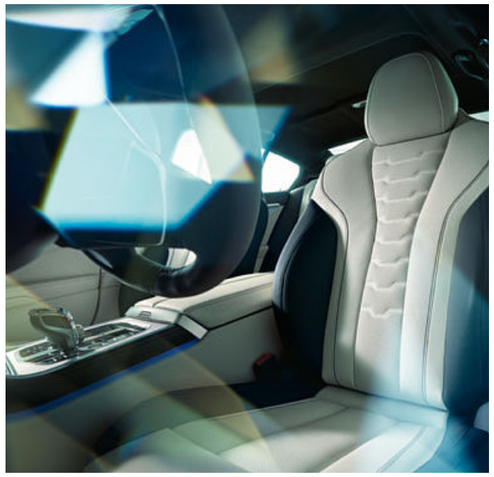

THE FEELING OF SPACE AND TOP TIMES.

A glance at the interior of the new BMW 8 Series Gran Coupé also makes this clear: You don't find compromises here. Instead, sportiness and luxury dominate the picture to the highest degree – for an exciting experience that gets your pulse racing as you get on board.

THE PERFECT PLACE FOR PILOTS.

In the cockpit, the sporty DNA of the new BMW 8 Series Gran Coupé is abundantly clear: Every line, every surface, every detail visualises the extraordinary driving experience that begins as soon as the powerful engine starts. Depending on the selection, Multifunction seats[1, 2, *] or even M Sport seats[1, *] offer a comfortable seating experience for the driver and front passenger, which at the same time stands out for its superior grip and dynamic driving style. A special design element of the new BMW 8 Series Gran Coupé is visible between the front seats: the centre console, which is wide and steeply ascending as is typical of sports cars, emphasises the longitudinal orientation of the interior and the focus on the road even in the dark thanks to precisely integrated light guides. In the centre console itself, all driving functions can be found in one place.

HEART PALPITATIONS ON ALL SEATS.

In the new BMW 8 Series Gran Coupé, the sporty driving experience is not limited to the front seats – rear-seat passengers also enjoy a driving experience that releases endorphins from the very first metre. This is especially due to the single-seat design of the rear seats, which is visually oriented to the seats in the cockpit: Not only do they offer ideal support and an enclosing seating feeling even on dynamic journeys, they also spread an unparalleled sports car atmosphere.

[1] Available as optional equipment.
[2] Standard for M850i xDrive.

* The availability of some equipment features and functions depends on engine variants or additional options. The market and production availability may vary. You can find detailed information about terms, standard and optional equipment at www.bmw.com or at your BMW Partner.

INTERIOR DESIGN

THE FEELING OF ABSOLUTE FREEDOM OF MOVEMENT.

So sporty – and yet so spacious: The interior of the new BMW 8 Series Gran Coupé impressively shows that you can have everything – and above all, a lot of space.

GENEROSITY, LUXURIOUSLY INTERPRETED.

When you get into the new BMW 8 Series Gran Coupé, you immediately experience what free space means: Never before has a Gran Coupé offered such a generous feeling of space. Head, shoulders, knees, legs – everywhere the body has maximum freedom and can exactly take the position that feels best. Lean back, stretch out and enjoy the experience of absolute freedom of movement. The extended centre console, which extends from the cockpit to the rear in a flowing movement, supports this impression. Together with the fold-out centre armrest, it defines two discreet individual seats, each offering maximum seating comfort.

LIGHT. AIR. LUXURY.

If you can't get enough of it, you'll feel particularly at home under the Panorama glass roof[1]. The large continuous glass surface extends far into the rear and emphasises the flowing shape of the new BMW 8 Series Gran Coupé from the outside. From the inside, it opens the view to the outside and creates a light-flooded, airy atmosphere on all seats. As soon as it gets dark, the Ambient light creates a special flair: Its numerous indirect LED and contour line lights create a feeling of space that is as unique as it is luxurious and can even be customised to suit personal taste.

[1] Available as optional equipment.

IN LOVE WITH THE DETAILS.

One look. One touch. An experience in itself. The very first encounter with the interior of the new BMW 8 Series Gran Coupé makes it clear: The best is obviously here – and only the beginning of a series of extraordinary experiences.

A FEAST FOR THE EYES.

The door closes – and everyday life is left behind. The interior of the new BMW 8 Series Gran Coupé is a world of its own – a world that combines the highest-quality materials, elaborate workmanship and a sense for the extraordinary to create a masterpiece that keeps on fascinating on every journey. Selected, fine materials and skilfully rendered details define the picture – such as the generous leather trim of the cockpit, which extends into the door panels, or the decorative surface in the centre console, which attracts attention. A special highlight in this fine environment are the exclusive ‚CraftedClarity'[1] glass applications: In a brilliant way, they emphasise the elegant interior ambience of the new BMW 8 Series Gran Coupé on the gear selector, iDrive Controller, volume control and Start/Stop button.

SYMPHONY OF THE SENSES.

Through the ears, right into the heart:
With four aluminium Kevlar mid-range speakers, three normal mid-range speakers, three diamond tweeters, four normal tweeters, two central subwoofers with Rohacell technology, a 10-channel amplifier and microphone-supported driving dynamics sound control, the Bowers & Wilkins Diamond Surround Sound System[1] creates an audio experience that turns every nuance, every emotion of music into an acoustic revelation.

[1] Available as optional equipment.

SPACES WITH WOW EFFECT

THE BMW 8 SERIES GRAN COUPÉ COMBINES ICONIC DESIGN WITH UNUSUAL SPACE. LIKE THOMAS HEATHERWICK'S BUILDINGS, WHICH DEFY THE USUAL STANDARDS. WITH HIS WALK-IN SCULPTURE "VESSEL", THE BRITISH STAR DESIGNER HAS JUST COMPLETED A SPECTACULAR BUILDING IN NEW YORK.

Maybe Thomas Heatherwick hasn't heard any other word as often as "wow"! No wonder, as the British architect has specialised in spectacular spaces. Spaces that astonish and awaken feelings of sublimity in the observer. Heatherwick's "Vessel", one of the largest architectural sculptures in the world, has just been finished in New York – architecture because the work is accessible and usable. Sculpture, because the work has no other purpose than to give pleasure, to make perspectives tangible and to experience space.

Investors have thus succeeded in making a well-calculated coup. And it's no wonder they chose Thomas Heatherwick. For the MOCAA, the Museum of Contemporary African Art in Cape Town, he previously gutted a listed former grain silo and created an almost sacral-looking space from the 30-metre-high concrete pipes. In London, he used a trick to save two historic railway coal terminals and turned them into a shopping centre. In the ensemble known as Coal Drops Yard, he brought together two conventional saddle roofs with a cheeky swing so as to create a very special space. Finally, in Singapore, he erected a university building that resembles a kind of beehive from the outside: Twelve round towers are crowded together here – the basic idea of the building is to avoid endless office corridors. In fact, the connecting atrium is once again a typical Heatherwick: The curved balustrades create a space in which you enjoy spending time.

As he's doing so well, Heatherwick is now working with BIG's Danish team to design Google's headquarters in Mountain-View, California. Like under a gigantic tent roof, the individual buildings are supposed to stand together and open up flexible spaces for interaction and work organisation. What is particularly remarkable about Heatherwick's success as an architect is that he did not even study architecture, but „three-dimensional design". And this is the key concept that has left a lasting impression on his spaces. "For me, every project is three-dimensional," he says, and in a broader sense as well: He finds the specifications of individual disciplines arbitrary and does not want them to apply to his work. Maybe it was this approach that earned him his gigantic reputation. He has already been compared to Leonardo da Vinci and Michelangelo, both artists who have worked beyond the boundaries of disciplines – from drawing to painting and sculpture to architecture.

But Thomas Heatherwick has remained modest despite the hymns of praise. "I'm not interested in my own taste," he says objectively, "I don't want to express myself." Born in 1970, the designer almost never speaks of himself in the first person, always focusing on his team, "the studio". He now has 200 employees. He himself, with curly hair and wide-cut designer clothing, appears among them like a motivator, a source of ideas and a guide. But when he talks about his projects, you can feel the inner fire, which is not satisfied with the usual standards.

PHOTOS: COURTESY OF MICHAEL MORAN
FOR RELATED-OXFORD, IMAGO IMAGES, HUFTON+CROW

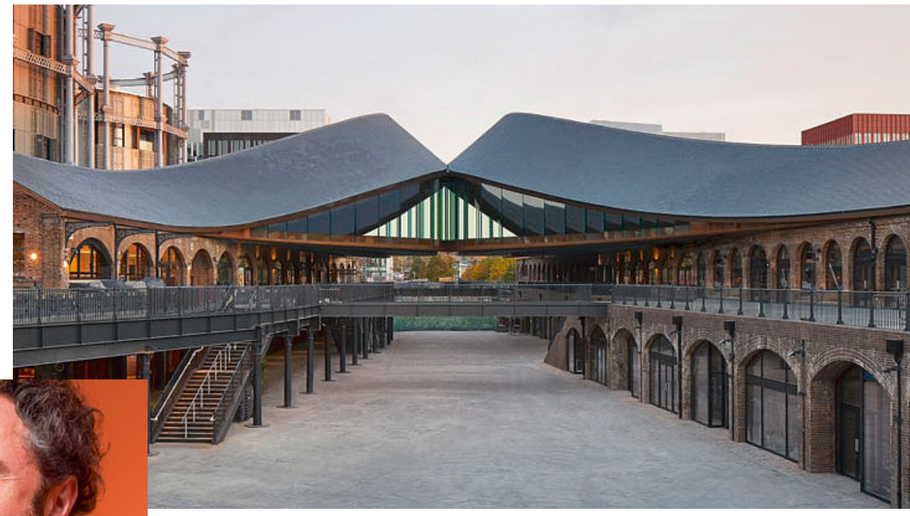

THOMAS ALEXANDER HEATHERWICK IS AN ENGLISH DESIGNER AND FOUNDER OF THE LONDON DESIGN STUDIO HEATHERWICK STUDIO. SINCE THE LATE 1990S, HEATHERWICK HAS BECOME ONE OF THE UK'S MOST IMPORTANT DESIGNERS.

Thomas Heatherwick wants to amaze people and yet he always remains pragmatic. "We try to find solutions to problems," he explains his approach. At the Hudson Yards in New York, this consisted of giving an attractive centrepiece to a rather sterile development area of eleven hectares. "The inspiration for 'Vessel'," explains its creator Thomas Heatherwick, "came from ancient Indian wells. The stairs led down to the water in a similar pattern, and we wondered if it could be made into an amphitheatre for the people." And one where the Instagram generation is involved. "Vessel" is highly photogenic, with insights, views and vistas of Manhattan, a mega motif like the Taj Mahal and the Eiffel Tower. "There are no guidelines as to what to do with it," explains Thomas Heatherwick, "we hope that it offers people unique and fresh moments." The almost infinite selection of possible paths in it breathes a spirit of freedom and attracts people from afar – Operation Landmark can already be considered a success since its opening.

HIGH CARAT FROM HIGH TECH.

IF YOU DON‘T KNOW THE ADDRESS, YOU WON‘T FIND IT. THE DIAMOND FOUNDRY IN SILICON VALLEY, SOUTH OF SAN FRANCISCO, IS A PLACE OF THE HIGHEST DISCRETION. NO COMPANY SIGN, NO STATEMENT PORTAL, NOTHING SUGGESTS WHAT IS HIDDEN BEHIND THE FACADE OF THIS SINGLE-STOREY FUNCTIONAL BUILDING: DIAMONDS THAT WILL ONE DAY BE WORTH SEVERAL MILLION US DOLLARS.

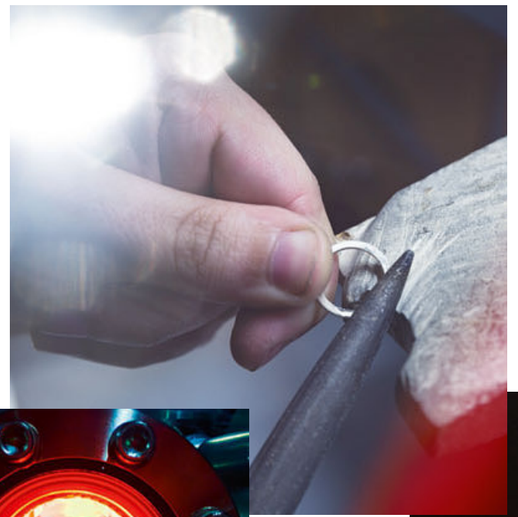

AT THE HEART OF THE DIAMOND FOUNDRY IS A LARGE SPACE WITH 20 HIGHLY DEVELOPED PLASMA REACTORS IN WHICH THESE ROUGH DIAMONDS ARE PRODUCED. THE HIGH-PRESSURE INCUBATORS, WHICH ARE OPERATED WITH SOLAR ENERGY, CAN GENERATE GAS CLOUDS WITH PARTICULARLY HIGH ENERGY DENSITY.

PLASMA REACTOR

This so-called plasma glows red, is as hot as the sun and contains many carbon atoms. A natural diamond splinter serves as the foundation of every new gemstone. On it, the carbon atoms form crystalline structures, layer by layer. It takes two weeks to produce a rough diamond of nine carats in this way. A stone that is chemically identical to a diamond created in nature. Only much more pure.

51-year-old Martin Roscheisen is what Silicon Valley calls a “serial entrepreneur”. After his studies, he left his hometown of Munich to go to the USA to do his doctorate at Stanford University, a Californian elite university. In 1992, he gained a doctorate in information technology and several new friends. Friends like his fellow students Larry Page and Sergey Brin – better known as the fathers of the Google search engine. Roscheisen founded three successful Internet companies one after the other. In 2002, he started his fourth company, Nanosolar, with the aim of dramatically reducing the costs of solar cells. And he came up with the idea for the Diamond Foundry: “At Nanosolar, we used a similar technology platform to manufacture thin-film solar cells.” For three years, his team worked on constructing suitable plasma reactors for diamond production. In 2012, he founded the Diamond Foundry with the engineers Jeremy Scholz and Kyle Gazay. And it hit the jackpot: Production and sales figures have almost doubled every quarter to date.

MARTIN ROSCHEISEN

IN 2019, DIAMOND FOUNDRY PLANS TO INCREASE ITS PRODUCTION FROM 100,000 CARATS TO ONE MILLION CARATS PER YEAR.

To achieve this goal, the company opened a second production facility in the US state of Washington at the beginning of the year. The timing seems perfect, as Frost & Sullivan analysts warned as early as 2015: In the middle of the 21st century, global diamond production will shrink to one tenth of its current level because diamond deposits are nearing their end. Diamond producers also receive support from the US trade authority, the Federal Trade Commission: In July 2018, it stipulated that the origin of a diamond should no longer make any difference in its designation. The term “natural diamond” is no longer permitted. “Above-ground” diamonds have been scoring well in price for a long time, because they are 30 to 40 percent cheaper than their siblings from the mines. The sustainability of these diamonds inspires not only customers, but also investors. Technology and Hollywood celebrities such as Twitter CEO Evan Williams and actor Leonardo DiCaprio invested around 100 million US dollars in the company. “I'm proud to invest in the Diamond Foundry,” says the lead actor in the Blood Diamond drama film. “This is where real diamonds are made in America – without the negative impact of diamond mines on people and the environment.” No wonder that a typical working day for Martin Roscheisen is no longer just behind a desk: “I spend time in our production and I support celebrities,” Roscheisen comments dryly. With success: For example, actress Patricia Arquette wore orchid earrings with 349 individual diamonds at the Golden Globes in January 2019 when she accepted her award on stage. Manufacturer of the earrings: the Diamond Foundry.

The technology of the diamond producers from Silicon Valley also offers new possibilities for the design of gemstones. A unique piece of jewellery, which the Diamond Foundry produced according to a joint design by Apple's head of design Sir Jony Ive and the renowned industrial designer Marc Newson, is the (RED) Diamond Ring, which was auctioned at the beginning of December 2018. The jewel reached a price of 461,250 US dollars.

The special feature of this ring is that it was cut completely from one diamond and has about 3000 tiny facets. A rough diamond of this purity and size would not have existed in nature. Even the production in the plasma reactor was a challenge. Since there was no diamond splinter in the required dimension, the atoms had to be outwitted, so to speak. With a few tricks, the Diamond Foundry technologists mastered this hurdle so that at the end, a diamond block of the desired size could be created.

Afterwards, everything had to be prepared for the grinding and polishing of this large-format stone – not an everyday task for the master cutter of the Diamond Foundry from Antwerp, who has already cut some of the world's largest diamonds. For this exclusive order, she had special tools manufactured by a diamond tool supplier in Belgium. In order to achieve maximum smoothness, the inner ring was cut out cylindrically with a micrometre-thin laser beam coated with water.

IT IS THE CUT THAT GIVES THE DIAMOND ITS VALUE.

It is the cut that gives the diamond its value. The highest level of precision is essential, not a fraction of a millimetre can be missed. Only then will the diamond reach its maximum radiant power. The Diamond Foundry is very proud of the high level of craftsmanship at which its polishers work and reliably achieve this goal. The brilliant cut, which is most in demand worldwide, is only one of 39 options. The cutters are able to bring diamonds into any individual shape.

For Martin Roscheisen, there is hardly a wish that his master technologists and craftsmen cannot fulfil in the Diamond Foundry. Except one. Martin Roscheisen promptly answers the question of whether he is missing something from Germany: “Nuremberg grilled sausages! Bavaria should urgently work to export them all over the world.”

PHOTOS: DIAMOND FOUNDRY

EMOTIONALLY INNOVATIVE.

In the new BMW 8 Series Gran Coupé, innovations are not an end in themselves. They always serve one goal: to turn every encounter into a remarkable experience that touches you for a long time to come.

INFORMATION, INTUITIVELY INTERPRETED: THE BMW LIVE COCKPIT PROFESSIONAL.

This is luxury that is far ahead of its time: The BMW Live Cockpit Professional is a display network consisting of a high-resolution instrument display with an impressive 12.3“ screen diagonal behind the steering wheel and a 10.25“ Control Display in the centre console. All information relevant to driving is displayed here in pin-sharp detail and a perfectly legible manner. To ensure that the driver can concentrate fully on the driving situation at the same time, the BMW Head-Up Display[1] additionally projects information relevant to driving into his field of vision without distraction.

GROUNDBREAKING AT THE HIGHEST LEVEL: BMW OPERATING SYSTEM 7.0.

The Live Cockpit Professional runs with the innovative BMW Operating System 7.0. It can be operated completely intuitively by gesture, speech, touch or iDrive control. For this purpose, the functionality of the Controller has been upgraded: For example, all digital services such as apps can now be selected directly. The Live Cockpit Professional can be individually configured so that you can set up the main menu level according to your personal wishes – because the focus is always on the wishes of the driver and his fellow passengers.

[1] The information in the BMW Head-Up Display is not fully visible when viewed through polarised sunglasses. Content shown will depend on the equipment options chosen. Further optional equipment is required to display specific items.

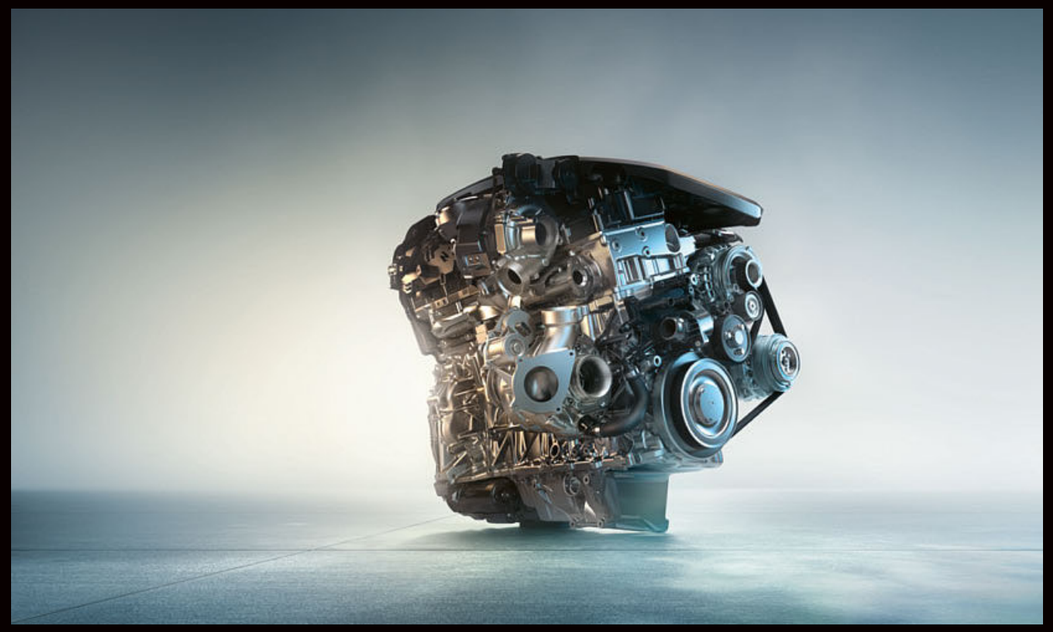

THE HEARTBEAT OF POWER: THE POWER OF THE M TWIN POWER TURBO V8 PETROL ENGINE IS REFLECTED IN ITS UNMISTAKABLE SOUND.

UNMISTAKABLY V8.

The sound of an engine always speaks the truth. The deeper it sounds, the more power rests in it. For the new BMW M850i xDrive Gran Coupé, the engineers at BMW have created a particularly powerful engine – with a unique, characteristic sonorous sound: the M TwinPower Turbo 8-cylinder petrol engine. Equipped with 390 kW (530 hp) and a generous 750 Nm torque, this engine easily masters any challenge. Pure power is not a value in itself in the new BMW M850i xDrive Gran Coupé. What counts is the class with which the power is unleashed – like when the new BMW 8 Series Gran Coupé accelerates from 0 to 100 km/h in just 3.9 seconds and leaves all expectations behind.

DESIGNED FOR ABSOLUTE PERFORMANCE – THE M TWIN POWER TURBO V8 PETROL ENGINE TRANSFORMS PHYSICAL QUANTITIES INTO UNBRIDLED EUPHORIA.

[1] Available as optional equipment.

* The availability of some equipment features and functions depends on engine variants or additional options. The market and production availability may vary. You can find detailed information about terms, standard and optional equipment at www.bmw.com or at your BMW Partner.

ENJOY POWER IN ITS HIGHEST FORM.

Outstanding performance: To be able to experience and enjoy it to the fullest is the first step towards an extraordinary experience. Mastering it at the wheel of a sports car reveals the skill of a driver – for this you need a truly exceptional vehicle: the new BMW M850i xDrive Gran Coupé.

FAMILIAR WITH EVERY CORNER.

Can the exciting driving experience in a real sports car be further enhanced? The answer is provided by the combination of the BMW xDrive all-wheel-drive system and the M Sport differential*. It offers maximum traction and agility when accelerating out of corners. Those who like it sporty but at the same time particularly comfortable will opt for the Adaptive M suspension Professional[1]. Even with the tightest radii and demanding cornering, it ensures maximum stability – for an unparalleled road holding. The overall result: Safety that not only remains a feeling, but also forms the basis for the driver's self-confidence with which the new BMW 8 Series Gran Coupé can take its place at the forefront of sports cars.

390 kW
(530 hp) output

3.9 s
from 0 to 100 km/h

4.395 cm^3
Capacity

750 Nm
Torque

ON ANY SURFACE, EVEN THE MOST CHALLENGING CHANGES OF DIRECTION: THE ADAPTIVE M SUSPENSION PROFESSIONAL[1] IMPRESSES THANKS TO ITS ACTIVE BODY ROLL STABILISATION.

THE ONLY ONE OF ITS KIND. WITH REAR-WHEEL DRIVE.

Something for purists: The new BMW 840i Gran Coupé is for those who appreciate the classic virtues of a sports car powered exclusively by the rear wheels. Connoisseurs do not want to do without this unique driving feeling – and experience it in this exceptional vehicle in an excitingly sporty way.

EXCITING SPORTS CAR FEELING. REINTERPRETED.

The new 840i engine of the BMW 8 Series Gran Coupé makes the heart of every sports car enthusiast beat faster from the very first contact. Thanks to the BMW TwinPower Turbo 6-cylinder petrol engine, the entire power of this elegant vehicle is unleashed when the accelerator pedal is briefly pressed, catapulting this exceptional vehicle forward. Extremely sprint-friendly and confident up to high rev ranges, this engine shows the purest form of all qualities that make a BMW engine so extraordinary. Depending on the selected driving experience mode, the experience extends from dynamic to maximum sporty – a characteristic feature that becomes an experience even for the ears thanks to the unique sound of the BMW TwinPower Turbo 6-cylinder petrol engine.

POWERFUL AND DYNAMIC – WITH REAR-WHEEL DRIVE.

If you're looking for a pure sports car experience, choose the rear-wheel drive* version of the BMW 840i: This is the only model in the 8 Series to transmit all the thrust of its powerful engine to the rear axle. Thanks to a lower total weight and an optimised weight distribution, this uncompromisingly sporty drive variant also ensures an exciting maximum of performance and dynamics. The pure experience of classic racing, euphorically interpreted – in the new BMW 840i Gran Coupé with rear-wheel drive. The new BMW TwinPower Turbo 6-cylinder petrol engine is also available with BMW xDrive[1, 2] intelligent all-wheel drive, which combines sportiness and driving comfort.

[1] Available as optional equipment.
[2] Standard for M850i xDrive.
* The availability of some equipment features and functions depends on engine variants or additional options. The market and production availability may vary. You can find detailed information about terms, standard and optional equipment at www.bmw.com or at your BMW Partner.

250 kW

(340 hp) output

5.2 s

from 0 to 100 km/h

2.998 cm^3

Capacity

500 Nm

Torque

CLASSY ROAD HOLDING IN EVERY SITUATION, COMBINED WITH MAXIMUM FORWARD THRUST: THE NEW BMW 840I DOMINATES EVERY STREET THAT IT TRAVELS ON.

EVERY TURN IS ANOTHER TRIUMPH:

The M Sport differential[2, *] ensures that even with challenging changes of direction or on various surfaces, the engine power is optimally brought to the road. A permanent, continuously electronically controlled multi-disc lock, which was developed for motor sports, reduces any speed differences between the rear wheels and distributes the drive torque variably between them. Depending on the setting, this makes it possible to achieve a driving experience that covers the entire range from traction-oriented to maximum driving dynamics and sportiness – but ensures maximum driving pleasure in every respect.

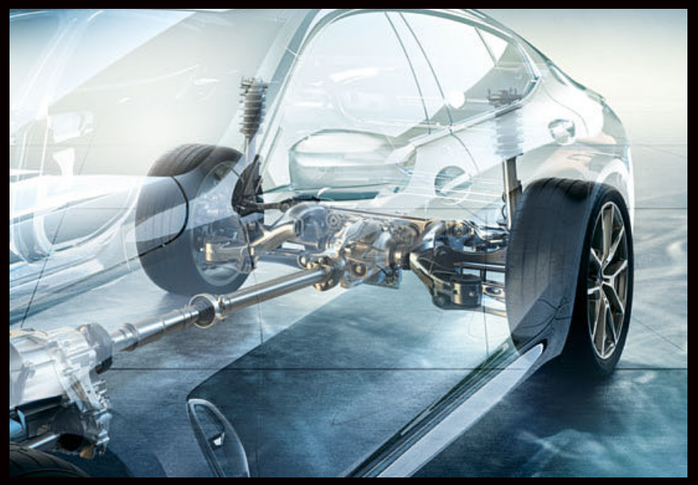

THE INCOMPARABLY PURE EXPERIENCE OF A CLASSIC REAR-WHEEL DRIVE – IN THE NEW BMW 840I GRAN COUPÉ, IT BECOMES EVIDENT AS TO HOW MUCH ADRENALIN THIS TYPE OF DRIVE GENERATES.

CARBON-FIBRE MIRROR CAPS[1, *] MAKE THE RACING CLAIM OF THE NEW BMW 8 SERIES GRAN COUPÉ VISIBLE.

EQUIPPED FOR THE WINNER'S PODIUM.

Details make the difference in the new BMW 8 Series Gran Coupé. And if all the details contribute harmoniously to sportiness and a powerful overall character, the result is definitely being number one.

M Carbon exterior package

M Sport package

M Technic sport package

LIGHT IN WEIGHT. STRONG IN EFFECT.

Carbon (CFRP) – a material made for the new BMW 8 Series Gran Coupé: Particularly light but highly stable, it reduces the vehicle's weight as a carbon-fibre roof and lowers the centre of gravity – for an even more exciting driving experience. In the M Carbon exterior package[1, *], it visually emphasises the sporty character of the new BMW 8 Series Gran Coupé even more with numerous carbon-fibre design elements such as exterior mirror caps or the one-piece carbon-fibre trim around the tailpipe trims. In the interior, carbon fibre shows its elegant side in interior trim finishers – never before have form, function and material been united in such a harmonious way.

THE FULL DYNAMIC PACKAGE.

Sportiness, increased further: The M Sport packages take the already outstanding energetic character of the new BMW 8 Series Gran Coupé to a new level. The M Sport package[1] perfects the character of the sports car. It includes the M Aerodynamics package with front apron, side skirts and rear apron, the 18" M Sport brakes[2], 19" or 20" light alloy wheels[1], illuminated M door sill finishers and the M lettering on the side walls. The M Technology Sport package[1, *] shifts one gear higher both visually and functionally and puts racing onto the road: It includes the M Sport differential, the 20" light alloy wheels with mixed performance tyres, the 19" M Sport brakes, the M seat belts and the BMW Individual high-gloss Shadow Line with extended contents.

THE INTERIOR TRIM FINISHERS MADE OF THE LIGHTWEIGHT MATERIAL CARBON FIBRE INTENSIFY THE RACING ATMOSPHERE IN THE INTERIOR.

BRINGING A RACING FEELING ONTO HE ROAD – THAT IS THE CLEAR OBJECTIVE OF NUMEROUS DESIGN DETAILS IN THE NEW BMW 8 SERIES GRAN COUPÉ.

[1] Available as optional equipment.
[2] Standard for M850i xDrive.

* The availability of some equipment features and functions depends on engine variants or additional options. The market and production availability may vary. You can find detailed information about terms, standard and optional equipment at www.bmw.com or at your BMW Partner.

3

EMOTION EXPRESSED AS INNOVATION.

Thoughts were born, ideas thought through and know-how taken to the extreme. Innovative technologies were developed, comfort and efficiency enhanced and performance levels increased. But all this was not done to put knowledge, ability and pioneering spirit in the foreground – but to make this one, special feeling even more tangible: Driving pleasure. Technology becomes emotion – Bayerische Motoren Werke.

THE BEST CONNECTION FOR THE BEST ENTERTAINMENT.

CONNECTIVITY AND INFOTAINMENT

The new BMW 8 Series Gran Coupé offers a wide range of groundbreaking digital services that make your life easier and driving more enjoyable with smart and innovative solutions.

A REAL PERSONALITY: THE BMW INTELLIGENT PERSONAL ASSISTANT.

If the BMW Operating System 7.0 is the alert mind of the new BMW 8 Series Gran Coupé, the BMW Intelligent Personal Assistant* is its engaging personality: It is there to advise and assist you through just a „Hey BMW“ or any other freely selectable activation word. Functions can be controlled intuitively using natural speech – thanks to separate microphones, the BMW Intelligent Personal Assistant even knows whether the driver or the front passenger is talking to it. The BMW Intelligent Personal Assistant learns each time it is used and gets to know the driver better. The new BMW 8 Series Gran Coupé becomes a little more „your vehicle“ with every spoken command.

THE RIGHT MOOD FOR EVERY FEELING: EXPERIENCE MODES.

Your BMW Intelligent Personal Assistant* takes care of you. It refreshes you when you are tired, relaxes you after a day full of stress and adjusts the interior of your vehicle optimally to suit your mood – with the innovative Experience Modes[1], *. Through a perfectly orchestrated overall staging in the interior consisting of light, climate, music and more, an experience for your senses is created that ideally supports the desired atmosphere – even on request: For example, say: “Hey BMW, activate Expressive Mode”, and the BMW Intelligent Personal Assistant starts this experience for you.

[1] Available as optional equipment.
* The availability of some equipment features and functions depends on engine variants or additional options. The market and production availability may vary. You can find detailed information about terms, standard and optional equipment at www.bmw.com or at your BMW Partner.

CLASSY IN EVERY SITUATION.

DRIVER ASSISTANCE

The intelligent BMW Personal CoPilot driver assistance systems on board a new BMW 8 Series Gran Coupé have one goal above all else: to do everything in their power to ensure that the driver can fully indulge in the exhilaration of sheer driving pleasure.

STATE-OF-THE-ART TECHNOLOGY – THERE WHEN YOU NEED IT.

Every day brings new situations in which you feel the need to be relieved. The innovative BMW Personal CoPilot helps you master them confidently, both while driving and parking. On monotonous routes, during congested traffic or in confusing situations, the Steering and lane control assistant of the Driving Assistant Professional[1, 2] is available to support you on request. The assistant maintains the speed and distance to the vehicle in front. At the same time, the vehicle remains safely in the lane and prevents unintentional leaving of the lane through steering intervention. The Reversing Assistant[1, *] turns even narrow parking or street situations into a relaxed experience: When driving forwards, it stores the last 50 metres of the driven distance and steers independently when driving backwards, while the driver only accelerates and brakes. So there are many possibilities – with one goal: to make every encounter with the new BMW 8 Series Gran Coupé a comfortable, safe and relaxed experience that gives you one thing above everything else: Joy.

SEE. AND BE SEEN.

The BMW Laserlight[1] shines – and a completely new world opens up: The high-intensity light, almost as bright as daylight, shines for up to 600 metres, thus optimising visibility and safety. This technology also visually sets an example: The dynamically contoured full LED headlights are the flattest in the BMW range and feature both blue accent clasps and an exclusive „BMW Laser“ lettering. They lend unique expressiveness and presence to the view forward – an appearance that you will want to look at again.

* The availability of some equipment features and functions depends on engine variants or additional options. The market and production availability may vary. You can find detailed information about terms, standard and optional equipment at www.bmw.com or at your BMW Partner.

[1] Available as optional equipment.
[2] Function may be limited in darkness, fog or bright glare.

A SPORTS CAR FOR EVERY DAY.

COMFORT AND FUNCTIONALITY

The perfect combination of sports car ambience and everyday suitability: Here, too, the new BMW 8 Series Gran Coupé manages to surpass even the highest demands – with possibilities that combine comfort with functionality and turn it into a true experience.

COMFORT ON ALL SEATS.

The new BMW 8 Series Gran Coupé offers a level of comfort you would hardly expect from a sports car and turns every journey into a very special experience – for the driver, front passenger and rear passengers. For example, the front and rear seats[1, *] can be heated individually. Should the dynamic sports car character of the new BMW 8 Series Gran Coupé lead to unexpected endorphin release, the automatic air conditioning with 4-zone control[1] on all four seats of the new BMW 8 Series Gran Coupé ensures individually pleasant interior temperatures: The passengers in the rear select their own comfortable climate via a separate climate control panel in the centre console. In the new BMW 8 Series Gran Coupé, comfort doesn't just depend on the seat row.

OPEN NEW SPACES.

Space for development and self-realisation: Even an everyday trip in the new BMW 8 Series Gran Coupé becomes a unique experience. Well thought-out options such as the through-loading function contribute to this: The rear seat backrest can be conveniently unlocked in a 40:20:40 ratio from the luggage compartment to create even more space. This makes it easy to store additional or particularly bulky luggage.

[1] Available as optional

* The availability of some equipment features and functions depends on engine variants or additional options. The market and production availability may vary. You can find detailed information about terms, standard and optional equipment at www.bmw.com or at your BMW Partner.

4

ONLY YOUR OWN WAY LEADS TO YOUR OWN GOALS.

Materials – hand crafted, exquisite and exclusive. Colours, surfaces and shapes as individual as the eyes that look upon it. Ideas and expectations are met without compromise – and exceeded. Emotion is the consequence of design: Bayerische Motoren Werke.

BMW INDIVIDUAL.
THE EXPRESSION OF PERSONALITY.

The paint finish BMW Individual Tanzanite Blue metallic accentuates the extroverted sporty character of the new BMW 8 Series Gran Coupé even further. The Xirallic effect pigment provides a shimmering effect in all nuances of the eponymous gemstone through added metal flops, which further intensifies in sunlight.

BMW Individual fine-wood trim Ash black silver effect high-gloss
The very name of this decorative strip gives an idea of how much sense for the special is expressed here.

Absolute sportiness, individually interpreted: The BMW Individual full leather trim 'Merino' Ivory White/Tartufo makes the driving experience particularly elegant and luxurious.

Nothing says more about a character than an aesthetic vision. BMW Individual turns this vision into reality: If only your taste and your imagination represent the limits, everything that is conceivable becomes possible. The result is accomplishment in perfection, selected from exceptional, exclusive equipment options and combined to create your very own idea of the new BMW 8 Series Gran Coupé.

WHICH COLOUR GIVES YOU DRIVING PLEASURE?

EXTERIOR COLOUR WORLDS

Sonic Speed Blue metallic, Tanzanite Blue metallic or Aventurine Red metallic? Pure metal Silver metallic or Carbon Black metallic? With the expressive colour palette for the new BMW 8 Series Gran Coupé, all possibilities are open to you. For whichever paintwork you decide: You always choose ground-breaking design and uncompromising dynamics, which prove passion and character.

■ STANDARD EQUIPMENT ☐ OPTIONAL EQUIPMENT

■ Non-metallic 300 Alpine White[1]

☐ Metallic A96 Mineral White[2]

☐ Metallic C2Y Bluestone*

☐ Metallic C1A Sonic Speed Blue[2]

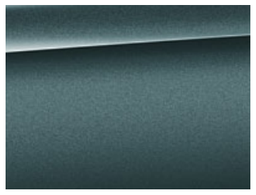

☐ Metallic C35 Blue Ridge Mountain*

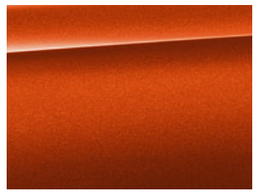

☐ Metallic C1X Sunset Orange[2]

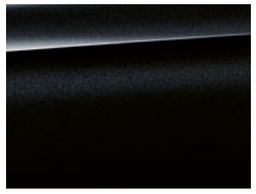

☐ Metallic 475 Black Sapphire[2]

[Colour samples] These colour samples are intended as an initial guide to the colours and materials available for your BMW. However, experience has shown that printed versions of paint, upholstery and interior trim colours cannot in all cases faithfully reproduce the appearance of the original colour. Please discuss your preferred colour choices with your BMW partner or in your dealership. There you can also see original samples and be assisted with special requests.

BMW INDIVIDUAL

☐ BMW Individual special paintwork Brilliant White metallic

☐ BMW Individual special paintwork Frozen Brilliant White metallic

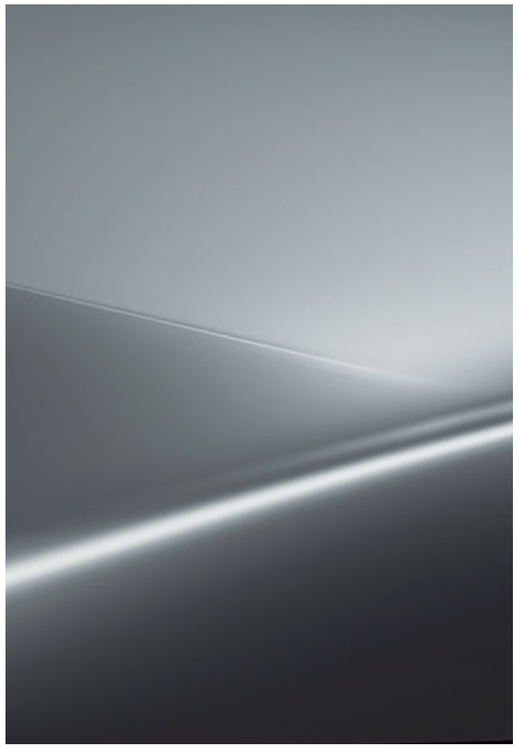

☐ BMW Individual special paintwork Pure metal Silver

☐ BMW Individual special paintwork Frozen Cashmere Silver metallic

☐ BMW Individual special paintwork Frozen Dark Silver metallic

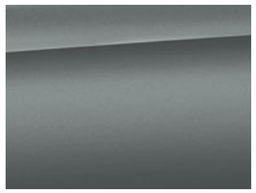

☐ BMW Individual X1D Frozen Bluestone metallic[2]

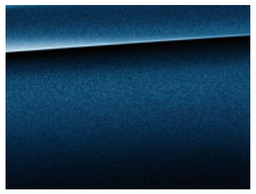

☐ BMW Individual C3Z Tanzanite Blue metallic[2]

☐ BMW Individual special paintwork Frozen Arctic Grey metallic

☐ BMW Individual special paintwork Frozen Dark Brown metallic

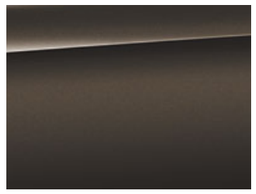

☐ BMW Individual C36 Dravit Grey metallic[2]

☐ BMW Individual C46 Almandine Brown metallic[2]

☐ BMW Individual X1C Aventurine Red metallic[2]

M SPORT PACKAGE

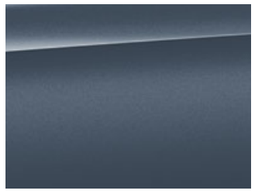

☐ Metallic C38 Barcelona Blue[3]

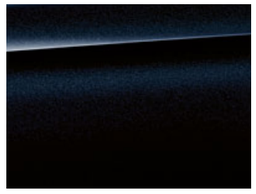

☐ Metallic 416 Carbon Black[3]

[1] Standard for M Sport package.
[2] Optionally available for the M Sport package.
[3] Exclusively available for the M Sport package.
The Standard and Optional equipment may differ between countries. Please consult your local BMW partner for more information.

* The availability of some equipment features and functions depends on engine variants or additional options. The market and production availability may vary. You can find detailed information about terms, standard and optional equipment at www.bmw.com or at your BMW Partner.

FOCUSED ON PLEASURE.

CLEARLY: ONE OF A KIND

IN ITS TIMELESS UNDERSTATEMENT, THE BMW INDIVIDUAL INTERIOR TRIM FINISHERS PIANO FINISH BLACK[1] UNDERLINE THE SPECIAL QUALITY OF THE INTERIOR.

The interplay of the BMW Individual full leather trim 'Merino' in Bicolour Ivory White/Midnight blue[1, *] with the BMW Individual headliner made of Alcantara[1, *] and M leather steering wheel[1, *] – both also in Midnight blue – stylishly emphasises the luxurious, sporty character of the interior.

[1] Available as optional equipment.

* The availability of some equipment features and functions depends on engine variants or additional options. The market and production availability may vary. You can find detailed information about terms, standard and optional equipment at www.bmw.com or at your BMW Partner.

THE PRECISE STITCHING IN COMBINATION WITH THE LEATHER PERFORATION AND THE EXCLUSIVE CONTRAST STITCHING OF THE BMW INDIVIDUAL FULL LEATHER TRIM 'MERINO'[1] SETS AN EXPRESSIVE ACCENT UNDER THE BMW INDIVIDUAL HEADLINER ALCANTARA[1, *] IN MIDNIGHT BLUE. THE TWO-COLOURED UPHOLSTERY MAKES THE DYNAMIC CONTOURS OF THE SEATS STAND OUT IN A PARTICULARLY IMPRESSIVE WAY.

AN UNMISTAKABLY STRONG CHARACTER.

THE JOY OF TRAVELLING MADE VISIBLE.

The BMW Individual full leather trim 'Merino' Black[1] and the anthracite BMW Individual headliner made of Alcantara[1] particularly emphasise the sportiness of the interior. The combination of the technical interior trim finishers made of stainless steel fabric[1, 2, 3, *] and the sporty interior completes the image of a thoroughbred sports car.

THE INTERIOR TRIM FINISHERS MADE OF STAINLESS STEEL FABRIC[1,2,3,*] ARE A FASCINATING DETAIL OF THE SPORTY INTERIOR, BOTH VISUALLY AND HAPTICALLY.

THE BMW INDIVIDUAL LEATHER TRIM 'MERINO' BLACK[1] LOOKS EXTREMELY SPORTY, BUT AT THE SAME TIME SPREADS AN EXTRAVAGANT AND EXCLUSIVE ATMOSPHERE.

[1] Available as optional equipment.
[2] Only available in conjunction with M Sport package.
[3] Standard for M850i xDrive.

* The availability of some equipment features and functions depends on engine variants or additional options. The market and production availability may vary. You can find detailed information about terms, standard and optional equipment at www.bmw.com or at your BMW Partner.

UNBRIDLED AND SEDUCTIVE.

HIGH CONTRAST. PROVOCATIVE

Like fire and earth: The BMW Individual extended leather trim 'Merino' Fiona Red/Black[1] attracts all attention. On the Multifunction seats[1, 3], its sporty appearance makes it particularly excitingly dynamic. The fascinating interplay with the deep brilliance of the high-gloss BMW Individual interior trim finishers piano finish Black[1] creates a seductive appeal that accelerates the pulse – typical of the new BMW 8 Series Gran Coupé.

THE BMW INDIVIDUAL INTERIOR TRIM FINISHERS MADE OF TULIP WOOD FASCINATE WITH THEIR DEEP BRILLIANCE.

THE BMW INDIVIDUAL EXTENDED LEATHER TRIM 'MERINO' FIONA RED/BLACK[1] IMPRESSES WITH ITS OUTSTANDING LEATHER QUALITY, HIGH-QUALITY STITCHING AND CONTRAST STITCHING IN THE SEATS. TOGETHER WITH THE BMW INDIVIDUAL HEADLINER ALCANTARA ANTHRACITE[1], AN ATMOSPHERE FULL OF LUXURY AND EXTRAVAGANCE IS CREATED.

TECHNICAL DATA.

		840i	840i xDrive	M850i xDrive	840d xDrive
Weight					
Unladen weight EU[1]	kg	1875	1930	2070	2000
Maximum permissible weight	kg	2435	2480	2600	2560
Permitted load	kg	635	625	605	635
Luggage capacity	l	440	440	440	440
BMW TwinPower Turbo engine[2]					
Cylinders/valves	–	6/4	6/4	8/4	6/4
Capacity	cm^3	2998	2998	4395	2993
Max. output/engine speed	kW (PS)/ 1/min	250 (340)/5000–6500	250 (340)/5000–6500	390 (530)/5500–6000	235 (320)/4400
Max. torque/engine speed	Nm/ 1/min	500/1600–4500	500/1600–4500	750/1800–4600	680/1750–2250
Power transmission					
Type of drive	–	Rear-wheel	All-wheel	All-wheel	All-wheel
Standard transmission	–	Steptronic Sport transmission	Steptronic Sport transmission	Steptronic Sport transmission	Steptronic Sport transmission
Performance					
Top speed	km/h	250[4]	250[4]	250[4]	250[4]
Acceleration 0–100 km/h	s	5.2	4.9	3.9	5.1
Consumption[2, 3] – All engines conform to the EU6 standard					
Combined	l/100 km	8.4–8.9	8.9–9.3	11.5–11.6	7.1–7.5
Exhaust emissions standard (type-certified)	–	EU6d-temp	EU6d-temp	EU6d-temp	EU6d-temp
Combined CO_2 emissions	g/km	192–202	203–212	260–265	185–194
Tank capacity, approx.	l	68	68	68	66
Wheels/tyres					
Tyre dimensions		245/45 R 18 Y 275/40 R 18 Y	245/45 R 18 Y 275/40 R 18 Y	245/35 R 20 Y 275/30 R 20 Y	245/45 R 18 Y 275/40 R 18 Y
Wheel size		8 J x 18 9 J x 18	8 J x 18 9 J x 18	8 J x 20 9 J x 20	8 J x 18 9 J x 18
Material		Light alloy	Light alloy	Light alloy	Light alloy

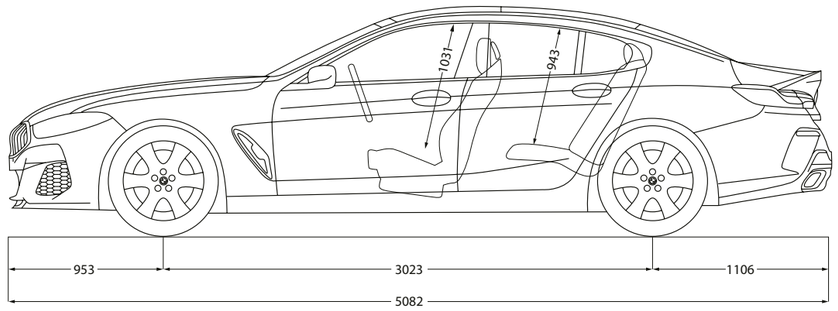

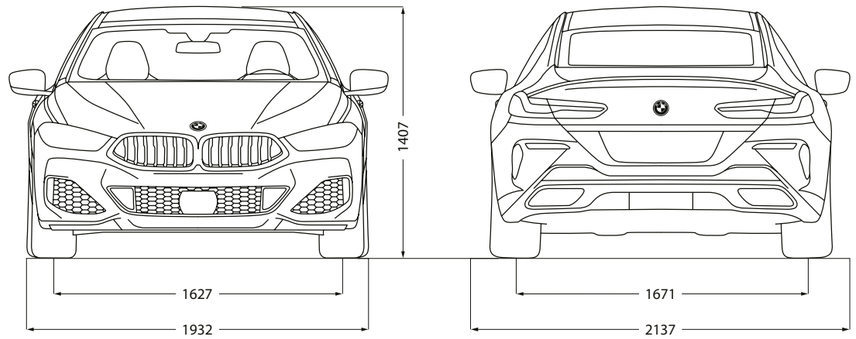

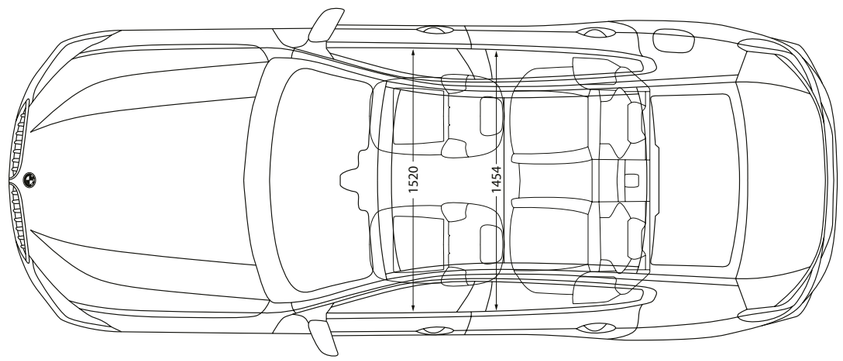

The figures for output, fuel consumption and CO_2 emissions refer to vehicles with standard transmission.

[1] The EC unladen weight refers to a vehicle with standard equipment and does not include any optional extras. The unladen weight includes a 90% full tank and a driver weight of 75 kg. Optional equipment may affect the weight of the vehicle, the payload and the top speed if the selected equipment has an impact on the vehicle's aerodynamics.
[2] Performance data of petrol engines apply to vehicles using RON 98 fuel. Fuel consumption data apply to vehicles using reference fuels in accordance with EU Regulation 2007/715. Unleaded RON 91 and higher with a maximum ethanol content of 10% (E10) may also be used. BMW recommends RON 95 super unleaded petrol.
[3] The data for fuel consumption, CO_2 emissions and energy consumption are determined in accordance with the measurements processes as defined by European Regulation (EU) 2007/715 in the applicable version. Data refer to a vehicle with base-level equipment in Germany, and the ranges account for differences according to the selected wheel and tyre size and the optional equipment and may change during the configuration process. Figures have been determined on the basis of the new WLTP test cycle and have been converted back into NEDC figures for comparability. [For these vehicles, values other than those specified here may apply for the assessment of taxes and other vehicle-related charges that are (also) based on CO_2 emissions].
[4] Electronically limited.

The models illustrated in this app show the equipment and configuration options (standard and optional) for vehicles produced by BMW AG for the German market. Alterations in standard and optional equipment and the configurations available for the different models, as described in this brochure, may occur after 04/29/2019, the date when this brochure went to press, or according to the specific requirements of other markets. Your local BMW Partner is available to provide further details. Subject to change in design and equipment.

© BMW AG, Munich, Germany. Not to be reproduced wholly or in part without prior written permission of BMW AG, Munich.

411 008 032 361 2019 CB. Printed in Germany 2019.

BMW M850i xDrive Gran Coupé:
M TwinPower Turbo 8-cylinder petrol engine, 390 kW (530 hp), 20" M light alloy wheels Y-spoke style 728 M Bicolour Cerium Grey with performance tyres and mixed tyres, Frozen Bluestone metallic exterior colour, multifunction seats for driver and front passenger in BMW Individual full leather trim 'Merino' Ivory White/Midnight blue, BMW interior trim finishers piano finish Black.